mareco LUCE
47032 bertinoro (FC) Italia
via s.croce, 121 (z.i.)
tel. +39 0543 4687
fax +39 0543 449051
info@marecoluce.it
www.marecoluce.it

This document is exclusive MARECO LUCE s.r.l., is strictly prohibited disclosure or reproduction, even partial, as well the use of without written consent of MARECO LUCE s.r.l..The company reserves the right to change models, dimensions and materials at any time without notice.

PRODUCT DATA SHEET

Slot parete

Code : 4038284N

PRODUCT FAMILY

Outdoor residential LED, cylindrical shape, spotlight for wall or ceiling installation (IP67)

MATERIAL CHARACTERISTICS

Cylindrical body in aluminium, and fixing base complete with swivel joint in reinforced thermoplastic.
Body in extruded aluminium EN AW 6060 with T5 thermal treatment (hardness Brinnel 55-80HB
Diffuser fixing ring, and closing rear ring in machined aluminium
Black anodising is carried out for all aluminium components
Diffuser in transparent flat tempered glass, and with a thickness of 5mm
Colour: Black

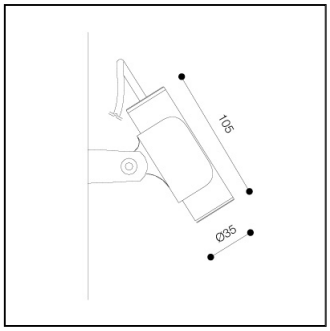

LIGHTING CHARACTERISTICS

1x3W monochromatic LED by CREE, 4000K neutral white (NW) 249lm, or 3000K warm white (WW) 191lm.
Lenses in either:
10°30°40°
Supply tension 700mA (Electronic driver NOT SUPPLIED)
Lamp is in a fixed position

700mA 3W

IP67

WIRING CHARACTERISTICS

Supply tension 700mA (Electronic driver NOT SUPPLIED)
Cable 2x0,75sqmm H05RN-F (1,5mt)

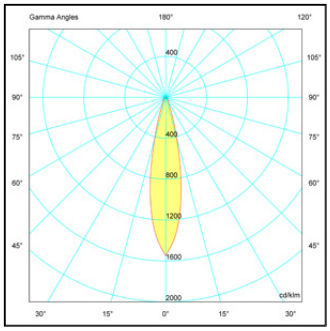

INSTALLATION AND ORDINARY MAINTENANCE CHARACTERISTICS

Wall fixing plate including the adjustable swivel, requiring n.1 screw (NOT SUPPLIED)
Adjustable in order to regulate the direction of the light flux
Ordinary maintenance unnecessary

MEASUREMENT CHARACTERISTICS

Light fitting, cylindrical shape with a Ø 35mm and a length of 105mmprint free coupons click petmart pharmacy coupon codefree viagra coupon modelosguayaquil.com printable coupons for viagra

Details

- Conformity with CEE directives
- Class III
- Mounting on normal flammable surface
- Energy-saving fittings
- Electronic supply
- Resistant to atmospheric agents
- Inalterable to ultraviolet radiations
- IP 67